HHS Public Access

Author manuscript

Brain Struct Funct. Author manuscript; available in PMC 2018 April 01.

Published in final edited form as:

Brain Struct Funct. 2017 April ; 222(3): 1267–1279. doi:10.1007/s00429-016-1276-z.

Functional and neurochemical interactions within the amygdala-medial prefrontal cortex circuit and their relevance to emotional processing

Stefano Delli Pizzi[1,2,3], **Piero Chiacchiaretta**[1,2], **Dante Mantini**[4,5,6], **Giovanna Bubbico**[1,2], **Antonio Ferretti**[1,2], **Richard A. Edden**[7,8], **Camillo Di Giulio**[1], **Marco Onofrj**[1,3], and **Laura Bonanni**[1,3]

[1]Department of Neuroscience, Imaging and Clinical Sciences, "G. d'Annunzio" University of Chieti-Pescara, Chieti, Italy [2]Institute for Advanced Biomedical Technologies (ITAB), "G. d'Annunzio" University of Chieti-Pescara, Chieti, Italy [3]Aging Research Centre, "G. d'Annunzio" University of Chieti-Pescara, Chieti, Italy [4]Research Centre for Motor Control and Neuroplasticity, KU Leuven, Louvain, Belgium [5]Department of Health Sciences and Technology, Neural Control of Movement Lab, ETH Zurich, Switzerland [6]Department of Experimental Psychology, Oxford University, Oxford, UK [7]Russell H. Morgan Department of Radiology and Radiological Science, The Johns Hopkins University School of Medicine, Baltimore, MD, USA [8]F.M. Kirby Center for Functional MRI, Kennedy Krieger Institute, Baltimore, MD, USA

Abstract

The amygdala–medial prefrontal cortex (mPFC) circuit plays a key role in emotional processing. GABA-ergic inhibition within the mPFC has been suggested to play a role in the shaping of amygdala activity. However, the functional and neurochemical interactions within the amygdala–mPFC circuits and their relevance to emotional processing remain unclear. To investigate this circuit, we obtained resting-state functional magnetic resonance imaging (rs-fMRI) and proton MR spectroscopy in 21 healthy subjects to assess the potential relationship between GABA levels within mPFC and the amygdala–mPFC functional connectivity. Trait anxiety was assessed using the State-Trait Anxiety Inventory (STAI-Y2). Partial correlations were used to measure the relationships among the functional connectivity outcomes, mPFC GABA levels and STAI-Y2 scores. Age, educational level and amount of the gray and white matters within ^{1}H-MRS volume of interest were included as nuisance variables. The rs-fMRI signals of the amygdala and the vmPFC were significantly anti-correlated. This negative functional coupling between the two regions was inversely correlated with the GABA+/tCr level within the mPFC and the STAI-Y2

Correspondence to: Laura Bonanni.

Electronic supplementary material The online version of this article (doi:10.1007/s00429-016-1276-z) contains supplementary material, which is available to authorized users.

Compliance with ethical standards

Conflict of interest The authors declare that they have no conflict of interest.

Ethical approval All procedures performed in studies involving human participants were in accordance with the ethical standards of the institutional and/or national research committee and with the 1964 Helsinki declaration and its later amendments or comparable ethical standards.

scores. We suggest a close relationship between mPFC GABA levels and functional interactions within the amygdala-vmPFC circuit, providing new insights in the physiology of emotion.

Keywords

Amygdala; γ-Aminobutyric acid (GABA); Trait anxiety; Medial prefrontal cortex (mPFC)

Introduction

The amygdala is a key structure within a complex circuit devoted to emotional interpretation, evaluation and response (Stein et al. 2002; Phan et al. 2006). Specifically, the basolateral nuclei of the amygdala (BLA) receive incoming information on potentially negative emotional stimuli from the sensory associative cortex and the thalamus (Nuss 2015). On the basis of this information, the BLA drives the autonomic and sensorimotor response by activating: (i) glutamatergic neurons projecting from the amygdala to the bed nucleus of the stria terminalis (BNST) and hypothalamus; and (ii) GABA-ergic neurons projecting from the centromedial nuclei of the amygdala (CeA) to the brainstem (Calhoon and Tye 2015). However, BLA activity is not exclusively shaped by sensory input but it is mainly modulated by reciprocal projections with the mPFC (Calhoon and Tye 2015; Nuss 2015). Specifically, the amygdala-mPFC circuit includes both bottom–up and top–down glutamatergic pathways. Through this circuit, the BLA sends excitatory inputs to the apical dendrites of the descending pyramidal neurons and to the dendrites of the fast-spiking GABA interneurons within the mPFC. Dendrites of the fast-spiking GABA-ergic interneurons modulate the descending pyramidal neurons which, in turn, regulate the amygdala output via the GABAergic intercalated (ITC) cells (Bishop 2007; Quirk and Gehlert 2003) or via the GABAergic neurons within the BLA (Akirav and Maroun 2007; Bishop 2007; Constantinidis et al. 2002; Chefer et al. 2011; Courtin et al. 2014). In this context, GABA-ergic transmission within the mPFC could be relevant to top–down control of the amygdala (Rosenkranz et al. 2003; Quirk and Beer 2006). In particular, it has been observed that GABA enhancement in the mPFC promotes amygdala hyperactivity (Akirav and Maroun 2007; Courtin et al. 2014; Chefer et al. 2011; Nuss 2015) and anxiety (Delli Pizzi et al. 2016). However, to date, understanding of the in vivo functional and neurochemical interactions within the amygdala–mPFC circuit is still shallow. Particularly, most knowledge on the fronto-limbic network is derived from animal studies, employing invasive methods to assess brain connections (e.g., lesion and tracing studies). Resting state-functional magnetic resonance imaging (rs-fMRI) and proton MR Spectroscopy (^{1}H-MRS) are powerful and non-invasive tools that allow to study in vivo the functional connections among brain areas (Gillebert and Mantini 2013) and the neurochemical profile in a region of interest (Puts and Edden 2012), respectively. In the present study, we aimed to assess the functional and neurochemical interactions within the amygdala–mPFC circuit in healthy subjects. Considering the centrality of the amygdala in the control of the emotional network (Calhoon and Tye 2015; Bickart et al. 2014), we chose this region as a “seed” for the rs-fMRI analysis. Furthermore, based on the known contribution of mPFC to descending control of the amygdala (Calhoon and Tye 2015; Delli Pizzi et al. 2016), we investigated the GABA content in the mPFC by using edited ^{1}H-MRS (Puts and Edden 2012; Mescher et al.

1998; Mullins et al. 2014). Considering the opposite action of the bottom–up and top–down pathways that are, respectively, modulated by the amygdala and the mPFC, our first hypothesis was that the activities of the amygdala and the mPFC would be negatively correlated at rest. Second, on the basis of the key role of GABA-ergic neurotransmission within the mPFC in balancing amygdala activity (Constantinidis et al. 2002), we expected a relationship between the functional coupling within the vmPFC–amygdala network and GABA content in the mPFC. Finally, considering our recent findings showing an association between GABA content within the mPFC and trait anxiety (Delli Pizzi et al. 2016), we expected that the functional and neurochemical interactions within the mPFC–amygdala loop would be associated to emotional processing and trait anxiety.

Materials and methods

Study sample

This study was approved by the Local Institutional Ethics Committee and was performed according to the Declaration of Helsinki (1997) and subsequent revisions. Informed consent was obtained from all individual participants included in the study.

Twenty-one healthy subjects aged between 41 and 88 years (10 males and 11 females) underwent MR imaging protocol and neuropsychological evaluation. Exclusion criteria were: prior history of major medical or psychiatric disorders; head injury or neurological problems; current pregnancy or breastfeeding; history of substance abuse; any pharmacological treatment; tobacco addiction; any contraindication to MRI scanning, including metal implants and claustrophobia. Alcohol and caffeine consumption were prohibited for 12 h prior to the MR measurement (Gao et al. 2013). Considering possible effects of menstrual cycle phase on GABA (De Bondt et al. 2015), pre-menopausal female subjects were selected in the follicular or luteal phase.

Neuropsychiatric and neuropsychological evaluation

Mental health status was clinically evaluated according to the fifth edition of Diagnostic and Statistical Manual of Mental Disorders (American Psychiatric Association guidelines 2013). The State-Trait Anxiety Inventory (STAI-Y2) was administered to test trait anxiety (Spielberger 1983). All subjects were assessed to ascertain normal brain functioning. The Mini Mental State Examination (MMSE) was performed for global cognitive assessment (Magni et al. 1996). The Frontal Assessment Battery (FAB) was carried out to exclude patients affected by frontal dysfunction (Appollonio et al. 2005). Lexical production and phonemic verbal fluency, as well as attention, were assessed by means of the verbal fluency test (FAS) (Oppenheimer 2008). Attention skills, sustained attention, divided attention, task coordination and set-shifting were investigated using the Trail Making Test (TMT) A and B (Giovagnoli et al. 1996). Attentional matrices were employed to investigate speed and attention (Abbate et al. 2007; Spinnler 1987). Short-term and long-term verbal memories (BSRT) (Babcock Story Recall Test) were assessed as well as auditory working memory (Baddeley and Wilson 2002). Visuo-spatial memory and ability were also investigated (Caffarra et al. 2002). Finally, the forward and backward Digit Span test was used to evaluate auditory working memory (Wechsler 1939).

MR protocol

All MR data were acquired by a Philips Achieva 3 Tesla scanner (Philips Medical Systems, Best, The Netherlands) using a whole-body radiofrequency coil for signal excitation and an 8-channel phased-array head coil for signal reception. T_1-weighted images were acquired using a 3D Turbo Field-Echo sequence (TFE, TR/TE = 11/5 ms, slice thickness of 0.8 mm). T_2-weighted fluid attenuation inversion recovery (FLAIR, TR/TE = 12,000/120 ms, slice thickness of 4 mm, FOV = 230 mm × 140 mm × 190 mm) images were also acquired to exclude participants with concomitant vascular pathology or with white matter (WM) abnormalities. ^{1}H-MRS spectrum was acquired from a volume of interest (VOI) of 2.0 (anterior– posterior) × 3.0 (left–right) × 3.0 (cranio-caudal) cm^3 placed on the mPFC (Fig. 1a). A MEshcher-GArwood Point RESolved Spectroscopy (MEGA-PRESS) sequence (TR/TE = 2000/68 ms, 320 averages) was used to acquire 1024 points with a spectral width of 2000 Hz. MEGA-PRESS generates two sub-spectra, with the editing pulse ON in one and OFF in the other. Specifically, an editing pulse is applied to GABA spins at 1.9 ppm to selectively refocus the evolution of *J*-coupling to the GABA spins at 3.02 ppm (ON spectra). In the other, the inversion pulse is applied elsewhere so that the *J*-coupling evolves freely throughout the TE (OFF spectra). Subtracting OFF spectra from ON spectra it removes overlying total creatine (tCr) signals from the edited spectrum, revealing the GABA signal in the difference spectrum (Mullins et al. 2014) (Fig. 1b). Resting-state Blood Oxygen Level Dependent (BOLD) fMRI data were acquired using a gradient-echo T_2*-weighted echo-planar (EPI) sequence with the following parameters: matrix size 64 × 64, FOV 230 mm, in-plane voxel size 3.6 mm × 3.6 mm, Sensitivity Encoding (SENSE) factor 1.8 anterior–posterior, slice thickness 5 mm, TE 30 ms. For each subject, a run of 300 functional volumes consisting of 21 transaxial slices was acquired with a TR of 1100 ms. Subjects were instructed to lie still and keep their eyes closed during acquisition.

Data analysis

^{1}H-MRS—tCr was used as an internal standard reference based on its stable levels reported in normal conditions (Bogner et al. 2010) and its independence from trait anxiety (Delli Pizzi et al. 2016). Of note, this method has been shown to have performance equal to, or better than, water referencing (Bogner et al. 2010). Because the GABA signal detected at 3.02 ppm is also expected to include contributions from homocarnosine and macromolecules (Henry et al. 2001), in the rest of the manuscript this signal is labeled as GABA+ to denote these other compounds (Gao et al. 2013; Rothman et al. 1997). GANNET, a MATLAB-based tool (Edden et al. 2014), was used to quantify GABA+/tCr in each spectrum using default parameters, including frequency and phase correction of time-resolved data using spectral registration (Near et al. 2015). The GANNET-processed signal for GABA is shown in Fig. 1c. A GANNET extension was used to obtain the mask of the ^{1}H-MRS VOI (Harris et al. 2015).

Structural MRI—The FLIRT tool (FSL; Smith et al. 2004) was used to co-register the structural images, Free-surfer's outputs and ^{1}H-MRS VOI mask in a common (native) space. FSL commands (fslmaths and fslstats) were used to define the gray matter (GM) and white matter (WM) which were contained within the ^{1}H-MRS VOI and to measure the tissue

volumes. All images were viewed in FSLView to validate the location of the ^{1}H-MRS VOI and confidence in tissue segmentation.

Rs-fMRI—The "recon-all-all" command line was used to process the T_1-weighted image of each subject in order to perform an automated reconstruction and labeling of the cortical and subcortical regions. Specifically, the preprocessing steps included magnetic field inhomogeneity correction, affine-registration to Talairach-atlas, intensity normalization and skull-strip. Further processing included segmentation of the subcortical white matter and deep GM volumetric structures, tessellation of the GM and WM matter boundary, automated topology correction, surface deformation following intensity gradients to optimally place the GM and WM and GM/cerebrospinal fluid borders at the location where the greatest shift in intensity defines the transition to the other tissue class. Seed regions (the whole structure of the right and left amygdalae) were defined from the aparc + aseg.mgz file. The functional connectivity analysis was performed using FreeSurfer Functional Analysis Stream (FS-FAST; http://surfer.nmrmgh.harvard.edu/fswiki/FsFastFunctionalConnectivityWalkthrough.). This tool assesses functional connectivity among brain areas by using the structure of interest, as a "seed region", automatically reconstructed from the structural images. Thus, the seed region definition is driven by individual anatomy and independent from the operator. Moreover, with this method the seed region covers the whole structure of interest, whereas in the classical approach (based on spherical regions of interest) only a partial area is included and the anatomical boundaries are ignored. Additionally, this method does not rely on coordinates from the literature to centre the seed mask, avoiding misunderstandings linked to discrepancy among studies. The fMRI data pre-processing (including motion and slice timing corrections, masking, registration to the anatomical image, sampling to the surface, and surface smoothing by 8 mm as well as sampling to the MNI305 with volume smoothing) was performed by the "preprocsess" command. Surface sampling of time-series data was performed onto the surface of the left and right hemispheres of the "fsaverage" template of FreeSurfer. Nuisance regressors were obtained for each individual extracting the EPI average time courses within the ventricle mask and the white matter mask (considering the top 5 principal components). These regressors, the motion correction parameters and a fifth order polynomial were removed from the EPI time series. Temporal band-pass filtering, to the frequency band considered of interest for rs-fMRI, was performed ($0.01<f<0.1$ Hz). The first four fMRI time points were discarded to allow for T_1-weighted equilibration of the MRI signal. For each subject, the mean Frame-wise Displacement (FD) was calculated as a summary statistic of motion during the fMRI run (Power et al. 2012). The mean signal time course within each seed region was used as a "regressor" for the functional connectivity analysis. For each subject, the first level analysis was performed using the "selxavg3-sess" command, calculating the Pearson correlation coefficient (r value) between the seed time series and the time series at each voxel. The correlation maps derived were then converted to Z score maps before entering the second level analysis. For group analysis, the "isxconcat-sess" command was used, to create a "stack" of maps from each subject. General linear modeling was performed to obtain a group statistical functional connectivity map between each seed (right/left amygdalae) and the cortex. Age was used as covariate. These statistical maps were thresholded at $p<0.05$ and corrected for multiple comparisons using False Discovery Rate

(FDR). The significant clusters obtained from this connectivity analysis were mapped onto the cortical surface of each hemisphere. Individual connectivity values between the seed region and the cortical region of interest were derived by averaging the Z scores of significant clusters in the target area. Note that since the ^{1}H-MRS VOI contained a bilateral portion of vmPFC, the Z scores of left and right clusters were pooled, in order to obtain a single value describing the connectivity between each seed and the vmPFC.

Individual maps showing the connectivity of the amygdalae to cortex were translated from common space ("fsavarage") into subject space, using the "mri_surf2-surf" command and, in turn, they were converted from the inflated surface to the volume, using "mri_label2cor" command. Then, to define the portion of the vmPFC-cluster which overlaps with GM within the ^{1}H-MRS VOI, the vmPFC-cluster mask was crossed with the GM mask within the ^{1}H-MRS VOI using "fslmaths" and "fslstat" utilities. For each subject, we calculated the percentage of the vmPFC-cluster which is contained within the ^{1}H-MRS VOI, dividing the volume of the vmPFC-cluster which is included within the ^{1}H-MRS VOI by the volume of the whole vmPFC-cluster.

Statistical analyses

Demographic, psychometric and imaging outcomes are presented as mean ± standard deviation. Partial correlations were used to measure relationships between the amygdala–vmPFC functional connectivity, mPFC GABA+/tCr and STAI-Y2 scores. Of note, in this analysis we adjusted for the known effect of age on GABA (Gao et al. 2013), possible effects of the GM and WM amounts within ^{1}H-MRS VOI and possible effects of movement (mean FD). The significance threshold was adjusted for multiple comparisons by using Bonferroni's correction.

Results

Demographic and clinical data

Table 1 summarizes demographic, psychometric, structural MRI and ^{1}H-MRS outcomes for the whole sample. Suppl. Table shows the mean ± standard deviation and cut-off values for each test.

Functional connectivity

Figure 2 shows the results of functional connectivity between the amygdala and the cortex. Specifically, both the right and left amygdala signals were anti-correlated with the timecourse of the bilateral vmPFC including the BA12 and the pregenual and subgenual portions of BA32. Positive correlations were found between the amygdalae and other cortical regions of the two hemispheres, as reported in Tables 2 and 3. Cortical clusters expressing a positive coupling with the amygdalae were found bilaterally in the dorsomedial prefrontal cortex (dmPFC) including the dorsal ACC and supplementary motor area (SMA).

The Suppl. Figure 1 shows the overlap between the vmPFC-cluster and the ^{1}H-MRS VOI in a representative subject. 73 ± 8 % (mean value across subjects ± standard deviation) of the vmPFC-cluster was contained within the H-MRS VOI.

Correlation analysis

A significant positive correlation was observed between the right amygdala-vmPFC connectivity and GABA+/tCr within the mPFC (Fig. 3a; $r = 0.64$, $p = 0.004$) and with STAI-Y2 (Fig. 3b; $r = 0.60$, $p = 0.009$). Importantly, this positive correlation between the amygdala-vmPFC functional connectivity and the GABA+/tCr within the mPFC was also confirmed considering only the mean Z scores from the right vmPFC-cluster which was included within the ^{1}H-MRS VOI (r = 0.67, $p = 0.005$). GABA+/tCr within the mPFC was significantly correlated with STAI-Y2 (Fig. 3c; $r = 0.79$, $p < 0.001$). Bonferroni's uncorrected correlation was found between the left amygdala-vmPFC connectivity and the GABA+/tCr content within the mPFC (Fig. 3d; $r = 0.52$, $p = 0.025$). No significant correlation was found between the left amygdala-vmPFC connectivity and the STAI-Y2 (Fig. 3e; $r = 0.40$, $p = 0.10$). The right amygdala-dmPFC connectivity and STAI-Y2 were also correlated ($r = 0.57$, $p = 0.028$).

Discussion

This is the first study reporting a close relationship between the amygdala-vmPFC functional coupling, GABA content within mPFC and trait anxiety (Fig. 4a). Importantly, our findings are not driven by age and gross structural factors. Specifically, we observed that the amygdala and the vmPFC activities are anti-correlated in healthy subjects. Electrophysiological data in animal models have shown that the BLA stimulation evokes a transient inhibition in 70–90 % of vmPFC neurons, whereas the remaining cells show enhanced firing (5–8 %) or are unresponsive to BLA stimulation (Floresco and Tse 2007; Ishikawa and Nakamura 2003; Pérez-Jaranay and Vives 1991). Studies assessing the limbic/prefrontal circuit, observed an inverse relationship between the activities of the ventral anterior cingulate cortex (vACC)/vmPFC and amygdala (Johnstone et al. 2007; Somerville et al. 2013). Task-related fMRI studies on healthy subjects have shown that the amygdale and the vmPFC responses were negatively correlated (Kim et al. 2003). Furthermore, an increased activity in the vmPFC and a concomitant decreased activity in the amygdala have been described during successful emotion regulation (Hariri et al. 2003; Lieberman et al. 2007; Urry et al. 2006). Other studies have reported that the intensity of negative affect was positively related with the amygdala activation and negatively associated with the vmPFC activity (Kim et al. 2003; Phan et al. 2005). Recent rs-fMRI studies showed a negative correlation between the amygdala and the vmPFC activities, suggesting that the vmPFC–amygdala network represents a negative feedback loop, resulting from the opposite contributions of bottom–up and top–down pathways (Gee et al. 2013; Sladky et al. 2015). Thus, we hypothesized that the negative functional coupling between the amygdala and the vmPFC could reflect the correct functioning of the top–down system.

In agreement with recent evidence that GABA levels predict negative BOLD responses in the same region (Duncan et al. 2014; Northoff et al. 2007; Stagg et al. 2014), we observed that the negative functional coupling between the vmPFC and the amygdala is negatively correlated with the mPFC GABA level. Animal studies demonstrated that higher GABA within the vmPFC reduces GABA-ergic inhibition within the amygdala, promoting its hyperactivity (Akirav and Maroun 2007; Courtin et al. 2014; Chefer et al. 2011; Nuss 2015).

Furthermore, it has also been suggested that the GABA content within the vmPFC is crucial in the modulation of the descending pyramidal glutamatergic neurons (Dilgen et al. 2013). The GABA interneurons of the vmPFC exert powerful inhibitory control over the glutamatergic output of pyramidal neurons, regulating the flow of information in the vmPFC (Constantinidis et al. 2002). In this context, we hypothesized that the low GABA level within the mPFC could promote the correct functioning of the top–down modulation of the amygdala and of the GABA-mediated inhibition on the BLA and the CeA (Fig. 4b). Conversely, high GABA levels within the mPFC could reduce the top–down modulation of the amygdala by down-regulating the GABA-mediated inhibition on the BLA and the CeA (Fig. 4c).

In a recent ^{1}H-MRS study, we observed a close relationship between GABA content within mPFC and trait anxiety (Delli Pizzi et al. 2016). In the current study, we extended these findings by showing a close correlation between the negative functional coupling within the amygdala–vmPFC and the trait anxiety. The down-regulation of the top–down control on amygdala activity has been strongly linked to anxiety (Calhoon and Tye 2015; Kim et al. 2011a; Nuss 2015). Moreover, it has been also observed that the coupling strength between the amygdala and the vmPFC predicts success of emotion regulation (Banks et al. 2007), individual differences in cognitive performance (Kelly et al. 2008) and beneficial outcomes in terms of reported anxiety (Kim et al. 2011a, b). Recent fMRI studies have highlighted the relevance of the amyg-dala–vmPFC connectivity in the pathophysiology of social anxiety disorder (SAD) (Kim et al. 2011b). Specifically, previous studies have described an increased amygdala reactivity, which positively correlates with symptom severity and/or trait anxiety (Goldin et al. 2009; Stein et al. 2002; Yoon et al. 2007). Furthermore, an inverse correlation was found between state anxiety in SAD patients and functional connectivity strength between the amygdala and the vmPFC (Hahn et al. 2011). Interestingly, Sladky et al. (2015) have recently observed abnormal connectivity between the ventral PFC and the amygdala in patients with SAD. Similarly, reduced functional connectivity between the vmPFC/vACC and the amygdala was described in patients with post-traumatic stress disorder (PTSD), supporting the relevance of an imbalance of the top–down control over the fear response (Koch et al. 2016). Further evidence has been provided by studies assessing the effect of mindfulness meditation on anxiety. Mindfulness meditation regulates emotions by regulating cognitive and affective evaluations to sensory events by cognitive reappraisal processes (Shapiro et al. 2006; Goldin and Gross 2010). In this context, the mPFC is relevant to down-regulate negative emotions by enhancing cognitive control and by modifying appraisals of sensory events (Urry et al. 2006; Hermann et al. 2009; McRae et al. 2010). While mPFC/ACC activation mediates the cognitive control of ruminative thought processes, reduction of mPFC/ACC activity was related with inability to manage ruminative cognitive processes and with higher levels of anxiety. Particularly, increased vmPFC activity during meditation was associated with higher levels of dispositional mind-fulness as well as down-regulation of amygdala activity with greater reductions in anxiety (Creswell et al. 2007). Hence, in anxious subjects, we suggest that the primary activations of the BLA and the CeA, which are caused by incoming information on potentially negative emotional stimuli, could be inadequately compensated by the top– down control pathway as expressed by high GABA content in the mPFC and the absence of negative functional coupling

between the vmPFC and the amygdala. Thus, the amygdala nuclei could be over-activated leading to somatic manifestation of anxiety (Fig. 4a–c). In this context, restoring GABAergic balance within the mPFC could be an important pharmacological target in the anxiety disorders. Post-mortem human studies suggest that benzodiazepine receptors are particularly dense in the vmPFC/vACC regions, especially within the subgenual areas (Palomero-Gallagher et al. 2008). Although no evidence is available on humans, animal studies demonstrated that the administration of $GABA_A$ receptor antagonist directly into the vmPFC sub-region, was able to promote extinction (McGaugh et al. 1990; Chang and Maren 2011; Fitzgerald et al. 2014). Particularly, GABA-receptor blockade within the infralimbic region could stimulate the glutamatergic pyramidal neurons and in turn inhibit amygdala activity by activating the ITCs cells (Berretta et al. 2005). It was reported that high dopamine storage capacity in the amygdala is related to greater amygdala activity and anxiety (Kienast et al. 2008) and that alcohol potentiates GABA-mediated inhibition of amygdala activity (Roberto et al. 2004). Conversely, it was reported that ethanol inhibits persistent activity in PFC neurons and that this action was potentiated by D_1-dopamine receptor antagonist (Tu et al. 2007). This evidence opens interesting questions on possible synergic and regulatory effect of the GABA and dopamine systems in the fronto-limbic network and emotional processing.

In the present study, we observed a lateralization of our findings to the right hemisphere. The relevance of the right hemisphere in emotion processing has been widely reported (Schwartz et al. 1975). Recent hypotheses suggest that the right hemisphere could control the perception and expression of emotions, whereas the left hemisphere could regulate emotional valence. Furthermore, it has been suggested that the right and left hemispheres could be involved in negative and positive emotions, respectively (Wallez and Vauclair 2011). Importantly, the dominance of the right hemisphere for anxiety and anxiety-related processes has been also widely reported in literature (Kühn et al. 2011).

Aside from the main goal of the present study to assess the mPFC–amygdala loop, the positive functional coupling between the amygdala and cortical regions, including insula, superior temporal gyrus, entorhinal cortex, dorso-lateral orbitofrontal gyrus, precuneus and fusiform gyrus, merits discussion. The existence of reciprocal interaction between the amygdala and these cortical areas is widely supported by data on animal models and humans (Bickart et al. 2014; Stein et al. 2007). Of particular interest for emotional processing is the positive coupling between the amygdala and the insula. Specifically, the amygdala–insula connection is thought to identify the emotional significance of a stimulus, to generate an emotional response and to regulate affective state (Adolphs 2003). In this context, an increase of amygdala and insula activation during emotion processing (Stein et al. 2007) and a correlation between the insula–amygdala and state/trait anxiety have been prominently described in anxiety-prone subjects (Baur et al. 2012).

While we underline GABA detection using the MEGA-PRESS sequence as a strength of this study, we emphasize that the technique has limited spatial resolution, requiring a ^{1}H-MRS VOI size equal to or larger than $3 \times 3 \times 2$ cm^3 in order to give a good signal-to-noise ratio (Edden and Barker 2007; Mullins et al. 2014; Puts and Edden 2012). Thus, due to these dimensional constraints and to avoid signal-loss artifact arising from inferior orbitofrontal

regions, the ^{1}H-MRS VOI was extended over the genu of the corpus callosum, which roughly divides the ventral and dorsal regions of the mPFC (Kim et al. 2011a). Studies of animal models have shown that the prelimbic and infralimbic cortices are characterized by different connections to the amygdala (Vertes 2004) as well as by different functions in emotional processing (Adhikari et al. 2015). The infralimbic cortex is mainly involved in extinction learning and anxiety regulation and corresponds to human vmPFC/vACC (Phelps et al. 2004). Conversely, the prelimbic cortex was involved in behavioral manifestation of anxiety and fear expression (Burgos-Robles et al. 2009; Sierra-Mercado et al. 2011) and its functional homologue on humans is the dmPFC encompassing the BA9 and the dorsal regions of the BA 32 (Robinson et al. 2012). Consistent with the literature (Fullana et al. 2015; Gee et al. 2013; Northoff et al. 2007; Robinson et al. 2012; Vytal et al. 2014), we found that bilateral clusters expressing the anticorrelation between the amygdalae and the vmPFC were located in BA12 and in the pregenual and subgenual portions of BA32 (Palomero-Gallagher et al. 2008, 2013), whereas bilateral clusters showing positive correlation between the amygdalae and dmPFC were located in the dACC/SMA, i.e., well outside our ^{1}H-MRS VOI. In agreement with Kienast et al. (2008), the amygdala– dmPFC connection was also correlated with trait anxiety. Importantly, we would remark that only the functional clusters within vmPFC were included in the ^{1}H-MRS VOI.

In conclusion, our findings suggest a close relationship between GABA content within mPFC and the negative functional coupling between the amygdala and the vmPFC, providing new insights into the physiology of the vmPFC– amygdala circuit and emotional processing. Particularly, we hypothesize that GABA within the mPFC could regulate the efficiency of the top–down excitatory modulation (glutamatergic) on GABA-ergic interneurons within the amygdala, modulating amygdala activity and thus the emotional response. This hypothesis is strongly supported by the close relationship between the functional coupling, the GABA content within the mPFC activity and the trait anxiety. However, further investigations are required to disentangle the functional contributes of the bottom–up and top–down pathways, in order to better clarify how the GABA content within the mPFC influences each one of these two systems.

Supplementary Material

Refer to Web version on PubMed Central for supplementary material.

Acknowledgments

Funding The work has been supported by the Italian Ministry of Health (grant no. GR-2010-2313418). This study applies tools developed under NIH R01 EB016089 and P41 EB015909; RAEE also receives salary support from these grants.

References

Abbate C, Luzzatti C, Vergani C. Test delle matrici: velocità e accuratezza della ricerca visiva nel corso dell'invecchiamento. G Gerontol. 2007; 55:11–20.

Adhikari A, Lerner TN, Finkelstein J, Pak S, Jennings JH, Davidson TJ, Ferenczi E, Gunaydin LA, Mirzabekov JJ, Ye L, Kim SY, Lei A, Deisseroth K. Basomedial amygdala mediates top-down

control of anxiety and fear. Nature. 2015; 527:179–185. DOI: 10.1038/nature15698 [PubMed: 26536109]

Adolphs R. Cognitive neuroscience of human social behaviour. Nat Rev Neurosci. 2003; 4:165–178. DOI: 10.1038/nrn1056 [PubMed: 12612630]

Akirav I, Maroun M. The role of the medial prefrontal cortex-amygdala circuit in stress effects on the extinction of fear. Neural Plast. 2007; 2007:1–11. DOI: 10.1155/2007/30873

American Psychiatric Association. Diagnostic and statistical manual of mental disorders. Am Psychiatric Assoc. 2013; doi: 10.1176/appi.books.9780890425596

Appollonio I, Leone M, Isella V, Piamarta F, Consoli T, Villa ML, Forapani E, Russo A, Nichelli P. The frontal assessment battery (FAB): normative values in an Italian population sample. Neurol Sci. 2005; 26:108–116. DOI: 10.1007/s10072-005-0443-4 [PubMed: 15995827]

Baddeley A, Wilson BA. Prose recall and amnesia: implications for the structure of working memory. Neuropsychologia. 2002; 40:1737–1743. DOI: 10.1016/S0028-3932(01)00146-4 [PubMed: 11992661]

Banks SJ, Eddy KT, Angstadt M, Nathan PJ, Phan KL. Amygdala-frontal connectivity during emotion regulation. Soc Cogn Affect Neurosci. 2007; 2:303–312. DOI: 10.1093/scan/nsm029 [PubMed: 18985136]

Baur V, Brühl AB, Herwig U, Eberle T, Rufer M, Delsignore A, Jäncke L, Hänggi J. Evidence of frontotemporal structural hypoconnectivity in social anxiety disorder: a quantitative fiber tractography study. Hum Brain Mapp. 2013; 34:437–446. DOI: 10.1002/hbm.21447 [PubMed: 22076860]

Berretta S, Pantazopoulos H, Caldera M, Pantazopoulos P, Paré D. Infralimbic cortex activation increases c-Fos expression in intercalated neurons of the amygdala. Neuroscience. 2005; 132:943–953. DOI: 10.1016/j.neuroscience.2005.01.020 [PubMed: 15857700]

Bickart KC, Dickerson BC, Barrett LF. The amygdala as a hub in brain networks that support social life. Neuropsychologia. 2014; 63:235–248. DOI: 10.1016/j.neuropsychologia.2014.08.013 [PubMed: 25152530]

Bishop SJ. Neurocognitive mechanisms of anxiety: an integrative account. Trends Cogn Sci. 2007; 11:307–316. DOI: 10.1016/j.tics.2007.05.008 [PubMed: 17553730]

Bogner W, Gruber S, Doelken M, Stadlbauer A, Ganslandt O, Boettcher U, Trattnig S, Doerfler A, Stefan H, Hammen T. In vivo quantification of intracerebral GABA by single-voxel (1)H-MRS—how reproducible are the results? Eur J Radiol. 2010; 73:526–531. DOI: 10.1016/j.ejrad.2009.01.014 [PubMed: 19201120]

Burgos-Robles A, Vidal-Gonzalez I, Quirk GJ. Sustained conditioned responses in prelimbic prefrontal neurons are correlated with fear expression and extinction failure. J Neurosci. 2009; 29:8474–8482. DOI: 10.1523/JNEUROSCI.0378-09.2009 [PubMed: 19571138]

Caffarra P, Vezzadini G, Dieci F, Zonato F, Venneri A. Rey-Osterrieth complex figure: normative values in an Italian population sample. Neurol Sci. 2002; 22:443–447. DOI: 10.1007/s100720200003 [PubMed: 11976975]

Calhoon GG, Tye KM. Resolving the neural circuits of anxiety. Nat Neurosci. 2015; 18:1394–1404. DOI: 10.1038/nn.4101 [PubMed: 26404714]

Chang CH, Maren S. Medial prefrontal cortex activation facilitates re-extinction of fear in rats. Learn Mem. 2011; 18:221–225. DOI: 10.1101/lm.2070111 [PubMed: 21430044]

Chefer VI, Wang R, Shippenberg TS. Basolateral amygdala-driven augmentation of medial prefrontal cortex GABAergic neurotransmission in response to environmental stimuli associated with cocaine administration. Neuropsychopharmacology. 2011; 36:2018–2029. DOI: 10.1038/npp.2011.89 [PubMed: 21633339]

Constantinidis C, Williams GV, Goldman-Rakic PS. A role for inhibition in shaping the temporal flow of information in prefrontal cortex. Nat Neurosci. 2002; 5:175–180. DOI: 10.1038/nn799 [PubMed: 11802172]

Courtin J, Chaudun F, Rozeske RR, Karalis N, Gonzalez-Campo C, Wurtz H, Abdi A, Baufreton J, Bienvenu TC, Herry C. Prefrontal parvalbumin interneurons shape neuronal activity to drive fear expression. Nature. 2014; 505:92–96. DOI: 10.1038/nature12755 [PubMed: 24256726]

Creswell JD, Way BM, Eisenberger NI, Lieberman MD. Neural correlates of dispositional mindfulness during affect labeling. Psychosom Med. 2007; 69:560–565. DOI: 10.1097/PSY.0b013e3180f6171f [PubMed: 17634566]

De Bondt T, De Belder F, Vanhevel F, Jacquemyn Y, Parizel PM. Prefrontal GABA concentration changes in women-influence of menstrual cycle phase, hormonal contraceptive use, and correlation with premenstrual symptoms. Brain Res. 2015; 1597:129–138. DOI: 10.1016/j.brainres.2014.11.051 [PubMed: 25481417]

Declaration of Helsinki. Recommendation guiding physicians in biomedical research involving human subjects. JAMA. 1997; 277:925–926. DOI: 10.1001/jama.1997.03540350075038 [PubMed: 9062334]

Delli Pizzi S, Padulo C, Brancucci A, Bubbico G, Edden RA, Ferretti A, Franciotti R, Manippa V, Marzoli D, Onofrj M, Sepede G, Tartaro A, Tommasi L, Puglisi-Allegra S, Bonanni L. GABA content within the ventromedial prefrontal cortex is related to trait anxiety. Soc Cogn Affect Neurosci. 2016; 11:758–766. DOI: 10.1093/scan/nsv155 [PubMed: 26722018]

Dilgen J, Tejeda HA, O'Donnell P. Amygdala inputs drive feedforward inhibition in the medial prefrontal cortex. J Neurophysiol. 2013; 110:221–229. DOI: 10.1152/jn.00531.2012 [PubMed: 23657281]

Duncan NW, Wiebking C, Northoff G. Associations of regional GABA and glutamate with intrinsic and extrinsic neural activity in humans-a review of multimodal imaging studies. Neurosci Biobehav Rev. 2014; 47:36–52. DOI: 10.1016/j.neubiorev.2014.07.016 [PubMed: 25066091]

Edden RA, Barker PB. Spatial effects in the detection of gamma-aminobutyric acid: improved sensitivity at high fields using inner volume saturation. Magn Reson Med. 2007; 58:1276–1282. DOI: 10.1002/mrm.21383 [PubMed: 17969062]

Edden RA, Puts NA, Harris AD, Barker PB, Evans CJ. Gannet: a batch-processing tool for the quantitative analysis of gamma-aminobutyric acid-edited MR spectroscopy spectra. J Magn Reson Imaging. 2014; 40:1445–1452. DOI: 10.1002/jmri.24478 [PubMed: 25548816]

Fitzgerald PJ, Whittle N, Flynn SM, Graybeal C, Pinard C, Gunduz-Cinar Kravitz AV, Singewald N, Holmes A. Prefrontal single-unit firing associated with deficient extinction in mice. Neurobiol Learn Mem. 2014; 113:69–81. DOI: 10.1016/j.nlm.2013.11.002 [PubMed: 24231425]

Floresco SB, Tse MT. Dopaminergic regulation of inhibitory and excitatory transmission in the basolateral amygdala-pre-frontal cortical pathway. J Neurosci. 2007; 27:2045–2057. DOI: 10.1523/JNEUROSCI.5474-06.2007 [PubMed: 17314300]

Fullana MA, Harrison BJ, Soriano-Mas C, Vervliet B, Cardoner N, Àvila-Parcet A, Radua J. Neural signatures of human fear conditioning: an updated and extended meta-analysis of fMRI studies. Mol Psychiatry. 2015; 21:500–508. DOI: 10.1038/mp.2015.88 [PubMed: 26122585]

Gao F, Edden RA, Li M, Puts NA, Wang H, Bai X, Zhao C, Wang X, Barker PB, Wang H, Bai X, Zhao C, Wang X, Barker PB. Edited magnetic resonance spectroscopy detects an age-related decline in brain GABA levels. Neuroimage. 2013; 78:75–82. DOI: 10.1016/j.neuroimage.2013.04.012 [PubMed: 23587685]

Gee DG, Humphreys KL, Flannery J, Goff B, Telzer EH, Shapiro M, Hare TA, Bookheimer SY, Tottenham N. A developmental shift from positive to negative connectivity in human amygdala-prefrontal circuitry. J Neurosci. 2013; 33:4584–4593. DOI: 10.1523/JNEUROSCI.3446-12.2013 [PubMed: 23467374]

Gillebert CR, Mantini D. Functional connectivity in the normal and injured brain. Neuroscientist. 2013; 19:509–522. DOI: 10.1177/1073858412463168 [PubMed: 23064084]

Giovagnoli AR, Del Pesce M, Mascheroni S, Simoncelli M, Laiacona M, Capitani E. Trail making test: normative values from 287 normal adult controls. Ital J Neurol Sci. 1996; 17:305–309. DOI: 10.1007/BF01997792 [PubMed: 8915764]

Goldin PR, Gross JJ. Effects of mindfulness-based stress reduction (MBSR) on emotion regulation in social anxiety disorder. Emotion. 2010; 10:83–91. DOI: 10.1037/a0018441 [PubMed: 20141305]

Goldin PR, Manber T, Hakimi S, Canli T, Gross JJ. Neural bases of social anxiety disorder: emotional reactivity and cognitive regulation during social and physical threat. Arch Gen Psychiatry. 2009; 66:170–180. DOI: 10.1001/archgenpsychiatry.2008.525 [PubMed: 19188539]

Hahn A, Stein P, Windischberger C, Weissenbacher A, Spindelegger C, Moser E, Kasper S, Lanzenberger R. Reduced resting-state functional connectivity between amygdala and orbitofrontal cortex in social anxiety disorder. Neuroimage. 2011; 56:881–889. DOI: 10.1016/j.neuroimage.2011.02.064 [PubMed: 21356318]

Hariri AR, Mattay VS, Tessitore A, Fera F, Weinberger DR. Neocortical modulation of the amygdala response to fearful stimuli. Biol Psychiatry. 2003; 53:494–501. DOI: 10.1016/S0006-3223(02)01786-9 [PubMed: 12644354]

Harris AD, Puts NA, Edden RA. Tissue correction for GABA-edited MRS: considerations of voxel composition, tissue segmentation, and tissue relaxations. J Magn Reson Imaging. 2015; 42:1431–1440. DOI: 10.1002/jmri.24903 [PubMed: 26172043]

Henry PG, Dautry C, Hantraye P, Bloch G. Brain GABA editing without macromolecule contamination. Magn Reson Med. 2001; 45:517–520. DOI: 10.1002/1522-2594(200103)45:3\517:AID-MRM1068>3.0.CO;2-6 [PubMed: 11241712]

Hermann A, Schäfer A, Walter B, Stark R, Vaitl D, Schienle A. Emotion regulation in spider phobia: role of the medial prefrontal cortex. Soc Cogn Affect Neurosci. 2009; 4:257–267. DOI: 10.1093/scan/nsp013 [PubMed: 19398537]

Ishikawa A, Nakamura S. Convergence and interaction of hippocampal and amygdalar projections within the prefrontal cortex in the rat. J Neurosci. 2003; 23:9987–9995. [PubMed: 14602812]

Johnstone T, van Reekum CM, Urry HL, Kalin NH, Davidson RJ. Failure to regulate: counterproductive recruitment of top-down prefrontal-subcortical circuitry in major depression. J Neurosci. 2007; 27:8877–8884. DOI: 10.1523/JNEUROSCI.2063-07.2007 [PubMed: 17699669]

Kelly AM, Uddin LQ, Biswal BB, Castellanos FX, Milham MP. Competition between functional brain networks mediates behavioral variability. Neuroimage. 2008; 39:527–537. DOI: 10.1016/j.neuroimage.2007.08.008 [PubMed: 17919929]

Kienast T, Hariri AR, Schlagenhauf F, Wrase J, Sterzer P, Buchholz HG, Smolka MN, Gründer G, Cumming P, Kumakura Y, Bartenstein P, Dolan RJ, Heinz A. Dopamine in amygdala gates limbic processing of aversive stimuli in humans. Nat Neurosci. 2008; 11:1381–1382. DOI: 10.1038/nn.2222 [PubMed: 18978778]

Kim H, Somerville LH, Johnstone T, Alexander AL, Whalen PJ. Inverse amygdala and medial prefrontal cortex responses to surprised faces. NeuroReport. 2003; 14:2317–2322. DOI: 10.1097/01.wnr.0000101520.44335.20 [PubMed: 14663183]

Kim MJ, Loucks RA, Palmer AL, Brown AC, Solomon KM, Marchante AN, Whalen PJ. The structural and functional connectivity of the amygdala: from normal emotion to pathological anxiety. Behav Brain Res. 2011a; 223:403–410. DOI: 10.1016/j.bbr.2011.04.025 [PubMed: 21536077]

Kim MJ, Gee DG, Loucks RA, Davis FC, Whalen PJ. Anxiety dissociates dorsal and ventral medial prefrontal cortex functional connectivity with the amygdala at rest. Cereb Cortex. 2011b; 21:1667–1673. DOI: 10.1093/cercor/bhq237 [PubMed: 21127016]

Koch SB, van Zuiden M, Nawijn L, Frijling JL, Veltman DJ, Olff M. Aberrant resting-state brain activity in posttraumatic stress disorder: a meta-analysis and systematic review. Depress Anxiety. 2016; 33:592–605. DOI: 10.1002/da.22478 [PubMed: 26918313]

Kühn S, Schubert F, Gallinat J. Structural correlates of trait anxiety: reduced thickness in medial orbitofrontal cortex accompanied by volume increase in nucleus accumbens. J Affect Disord. 2011; 134:315–319. DOI: 10.1016/j.jad.2011.06.003 [PubMed: 21705088]

Lieberman MD, Eisenberger NI, Crockett MJ, Tom SM, Pfeifer JH, Way BM. Putting feelings into words: affect labeling disrupts amygdala activity in response to affective stimuli. Psychol Sci. 2007; 18:421–428. DOI: 10.1111/j.1467-9280.2007.01916.x [PubMed: 17576282]

Magni E, Binetti G, Bianchetti A, Rozzini R, Trabucchil M. Mini-Mental State Examination: a normative study in Italian elderly population. Eur J Neurol. 1996; 3:198–202. DOI: 10.1111/j.1468-1331.1996.tb00423.x [PubMed: 21284770]

McGaugh JL, Castellano C, Brioni J. Picrotoxin enhances latent extinction of conditioned fear. Behav Neurosci. 1990; 104:264–267. DOI: 10.1037/07357044.104.2.264 [PubMed: 2346621]

McRae K, Hughes B, Chopra S, Gabrieli JD, Gross JJ, Ochsner KN. The neural bases of distraction and reappraisal. J Cogn Neurosci. 2010; 22:248–262. DOI: 10.1162/jocn.2009.21243 [PubMed: 19400679]

Mescher M, Merkle H, Kirsch J, Garwood M, Gruetter R. Simultaneous in vivo spectral editing and water suppression. NMR Biomed. 1998; 11:266–272. DOI: 10.1002/(SICI)1099-1492(199810)11:6<266:AID-NBM530>3.0.CO;2-J [PubMed: 9802468]

Mullins PG, McGonigle DJ, O'Gorman RL, Puts NA, Vidyasagar R, Evans CJ, Edden RA. Current practice in the use of MEGA-PRESS spectroscopy for the detection of GABA. Neuroimage. 2014; 86:43–52. DOI: 10.1016/j.neuroimage.2012.12.004 [PubMed: 23246994]

Near J, Edden R, Evans CJ, Paquin R, Harris A, Jezzard P. Frequency and phase drift correction of magnetic resonance spectroscopy data by spectral registration in the time domain. Magn Reson Med. 2015; 73:44–50. DOI: 10.1002/mrm.25094 [PubMed: 24436292]

Northoff G, Walter M, Schulte RF, Beck J, Dydak U, Henning A, Boeker H, Grimm S, Boesiger P. GABA concentrations in the human ACC predict negative BOLD responses in fMRI. Nat Neurosci. 2007; 10:1515–1517. DOI: 10.1038/nn2001 [PubMed: 17982452]

Nuss P. Anxiety disorders and GABA neurotransmission: a disturbance of modulation. Neuropsychiatr Dis Treat. 2015; 11:165–175. DOI: 10.2147/NDT.S58841 [PubMed: 25653526]

Oppenheimer DM. The secret life of fluency. Trends Cogn Sci. 2008; 12:237–241. DOI: 10.1016/j.tics.2008.02.014 [PubMed: 18468944]

Palomero-Gallagher N, Mohlberg H, Zilles K, Vogt B. Cytology and receptor architecture of human anterior cingulate cortex. J Comp Neurol. 2008; 508:906–926. DOI: 10.1002/cne.21684 [PubMed: 18404667]

Palomero-Gallagher N, Zilles K, Schleicher A, Vogt BA. Cyto-and receptor architecture of area 32 in human and macaque brains. J Comp Neurol. 2013; 521:3272–86. DOI: 10.1002/cne.23346 [PubMed: 23787873]

Pérez-Jaranay JM, Vives F. Electrophysiological study of the response of medial prefrontal cortex neurons to stimulation of the basolateral nucleus of the amygdala in the rat. Brain Res. 1991; 564:97–101. [PubMed: 1777825]

Phan KL, Fitzgerald DA, Nathan PJ, Moore GJ, Uhde TW, Tancer ME. Neural substrates for voluntary suppression of negative affect: a functional magnetic resonance imaging study. Biol Psychiatry. 2005; 57:210–219. DOI: 10.1016/j.biopsych.2004.10.030 [PubMed: 15691521]

Phan KL, Fitzgerald DA, Nathan PJ, Tancer ME. Association between amygdala hyperactivity to harsh faces and severity of social anxiety in generalized social phobia. Biol Psychiatry. 2006; 59:424–429. DOI: 10.1016/j.biopsych.2005.08.012 [PubMed: 16256956]

Phelps EA, Delgado MR, Nearing KI, LeDoux JE. Extinction learning in humans: role of the amygdala and vmPFC. Neuron. 2004; 43:897–905. DOI: 10.1016/j.neuron.2004.08.042 [PubMed: 15363399]

Power JD, Barnes KA, Snyder AZ, Schlaggar BL, Petersen SE. Spurious but systematic correlations in functional connectivity MRI networks arise from subject motion. Neuroimage. 2012; 59:2142–2154. DOI: 10.1016/j.neuroimage.2011.10.018 [PubMed: 22019881]

Puts NA, Edden RA. In vivo magnetic resonance spectroscopy of GABA: a methodological review. Prog Nucl Magn Reson Spectrosc. 2012; 60:29–41. DOI: 10.1016/j.pnmrs.2011.06.001 [PubMed: 22293397]

Quirk GJ, Beer JS. Prefrontal involvement in the regulation of emotion: convergence of rat and human studies. Curr Opin Neurobiol. 2006; 16:723–727. DOI: 10.1016/j.conb.2006.07.004 [PubMed: 17084617]

Quirk GJ, Gehlert DR. Inhibition of the amygdala: key to pathological states? Ann N Y Acad Sci. 2003; 985:263–272. DOI: 10.1111/j.1749-6632.2003.tb07087.x [PubMed: 12724164]

Roberto M, Madamba SG, Stouffer DG, Parsons LH, Siggins GR. Increased GABA release in the central amygdala of ethanol-dependent rats. J Neurosci. 2004; 24:10159–10166. DOI: 10.1523/JNEUROSCI.3004-04.2004 [PubMed: 15537886]

Robinson OJ, Charney DR, Overstreet C, Vytal K, Grillon C. The adaptive threat bias in anxiety: amygdala-dorsomedial prefrontal cortex coupling and aversive amplification. Neuroimage. 2012; 60:523–529. DOI: 10.1016/j.neuroimage.2011 [PubMed: 22178453]

Rosenkranz JA, Moore H, Grace AA. The prefrontal cortex regulates lateral amygdala neuronal plasticity and responses to previously conditioned stimuli. J Neurosci. 2003; 23:11054–11064. [PubMed: 14657162]

Rothman DL, Behar KL, Prichard JW, Petroff OA. Homocarnosine and the measurement of neuronal pH in patients with epilepsy. Magn Reson Med. 1997; 38:924–929. [PubMed: 9402193]

Schwartz GE, Davidson RJ, Maer F. Right hemisphere lateralization for emotion in the human brain: interactions with cognition. Science. 1975; 190:286–288. DOI: 10.1126/science.1179210 [PubMed: 1179210]

Shapiro SL, Carlson LE, Astin JA, Freedman B. Mechanisms of mindfulness (2006). J Clin Psychol. 2006; 62:373–386. DOI: 10.1002/jclp.20237 [PubMed: 16385481]

Sierra-Mercado D, Padilla-Coreano N, Quirk GJ. Dissociable roles of prelimbic and infralimbic cortices, ventral hippocampus, and basolateral amygdala in the expression and extinction of conditioned fear. Neuropsychopharmacology. 2011; 36:529–538. DOI: 10.1038/npp.2010.184 [PubMed: 20962768]

Sladky R, Höflich A, Küblböck M, Kraus C, Baldinger P, Moser E, Lanzenberger R, Windischberger C. Disrupted effective connectivity between the amygdala and orbitofrontal cortex in social anxiety disorder during emotion discrimination revealed by dynamic causal modeling for fMRI. Cereb Cortex. 2015; 25:895–903. DOI: 10.1093/cercor/bht279 [PubMed: 24108802]

Smith SM, Jenkinson M, Woolrich MW, Beckmann CF, Behrens TE, Johansen-Berg H, Bannister PR, De Luca M, Drobnjak I, Flitney DE, Niazy RK, Saunders J, Vickers J, Zhang Y, De Stefano N, Brady JM, Matthews PM. Advances in functional and structural MR image analysis and implementation as FSL. Neuroimage. 2004; 23:S208–S219. DOI: 10.1016/j.neuroimage.2004.07.051 [PubMed: 15501092]

Somerville LH, Wagner DD, Wig GS, Moran JM, Whalen PJ, Kelley WM. Interactions between transient and sustained neural signals support the generation and regulation of anxious emotion. Cereb Cortex. 2013; 23:49–60. DOI: 10.1093/cercor/bhr373 [PubMed: 22250290]

Spielberger, CD. Manual for the State-Trait Anxiety Inventory STAI (Form Y). Mind Garden; Palo Alto: 1983.

Spinnler, H., Tognoni, G. Gruppo italiano per lo studio neuropsicologico dell'invecchiamento. Standardizzazione e Taratura Italiana di test neuropsicologici; Masson Italia Periodici: 1987.

Stagg CJ, Bachtiar V, Amadi U, Gudberg CA, Ilie AS, Sampaio-Baptista C, O'Shea J, Woolrich M, Smith SM, Filippini N, Near J, Johansen-Berg H. Local GABA concentration is related to network-level resting functional connectivity. Elife. 2014; 3:e01465.doi: 10.7554/eLife.01465 [PubMed: 24668166]

Stein MB, Goldin PR, Sareen J, Zorrilla LT, Brown GG. Increased amygdala activation to angry and contemptuous faces in generalized social phobia. Arch Gen Psychiatry. 2002; 59:1027–1034. DOI: 10.1001/archpsyc.59.11.1027 [PubMed: 12418936]

Stein MB, Simmons AN, Feinstein JS, Paulus MP. Increased amygdala and insula activation during emotion processing in anxiety-prone subjects. Am J Psychiatry. 2007; 164:318–327. DOI: 10.1176/ajp.2007.164.2.318 [PubMed: 17267796]

Tu Y, Kroener S, Abernathy K, Lapish C, Seamans J, Chandler LJ, Woodward JJ. Ethanol inhibits persistent activity in prefrontal cortical neurons. J Neurosci. 2007; 27:4765–4775. DOI: 10.1523/JNEUROSCI.5378-06.2007 [PubMed: 17460089]

Urry HL, van Reekum CM, Johnstone T, Kalin NH, Thurow ME, Schaefer HS, Jackson CA, Frye CJ, Greischar LL, Alexander AL, Davidson RJ. Amygdala and ventromedial prefrontal cortex are inversely coupled during regulation of negative affect and predict the diurnal pattern of cortisol secretion among older adults. J Neurosci. 2006; 26:4415–4425. DOI: 10.1523/JNEUROSCI.3215-05.2006 [PubMed: 16624961]

Vertes RP. Differential projections of the infralimbic and prelimbic cortex in the rat. Synapse. 2004; 51:32–58. DOI: 10.1002/syn.10279 [PubMed: 14579424]

Vytal KE, Overstreet C, Charney DR, Robinson OJ, Grillon C. Sustained anxiety increases amygdala-dorsomedial prefrontal coupling: a mechanism for maintaining an anxious state in healthy adults. J Psychiatry Neurosci. 2014; 39:321–329. DOI: 10.1503/jpn.130145 [PubMed: 24886788]

Wallez C, Vauclair J. Right hemisphere dominance for emotion processing in baboons. Brain Cogn. 2011; 75:164–169. DOI: 10.1016/j.bandc.2010.11.004 [PubMed: 21131120]

Wechsler, D. The measurement of adult intelligence. Williams & Wilkins Co; Baltimore: 1939.

Yoon KL, Fitzgerald DA, Angstadt M, McCarron RA, Phan KL. Amygdala reactivity to emotional faces at high and low intensity in generalized social phobia: a 4-Tesla functional MRI study. Psychiatry Res. 2007; 154:93–98. DOI: 10.1016/j.pscychresns.2006.05.004 [PubMed: 17097275]

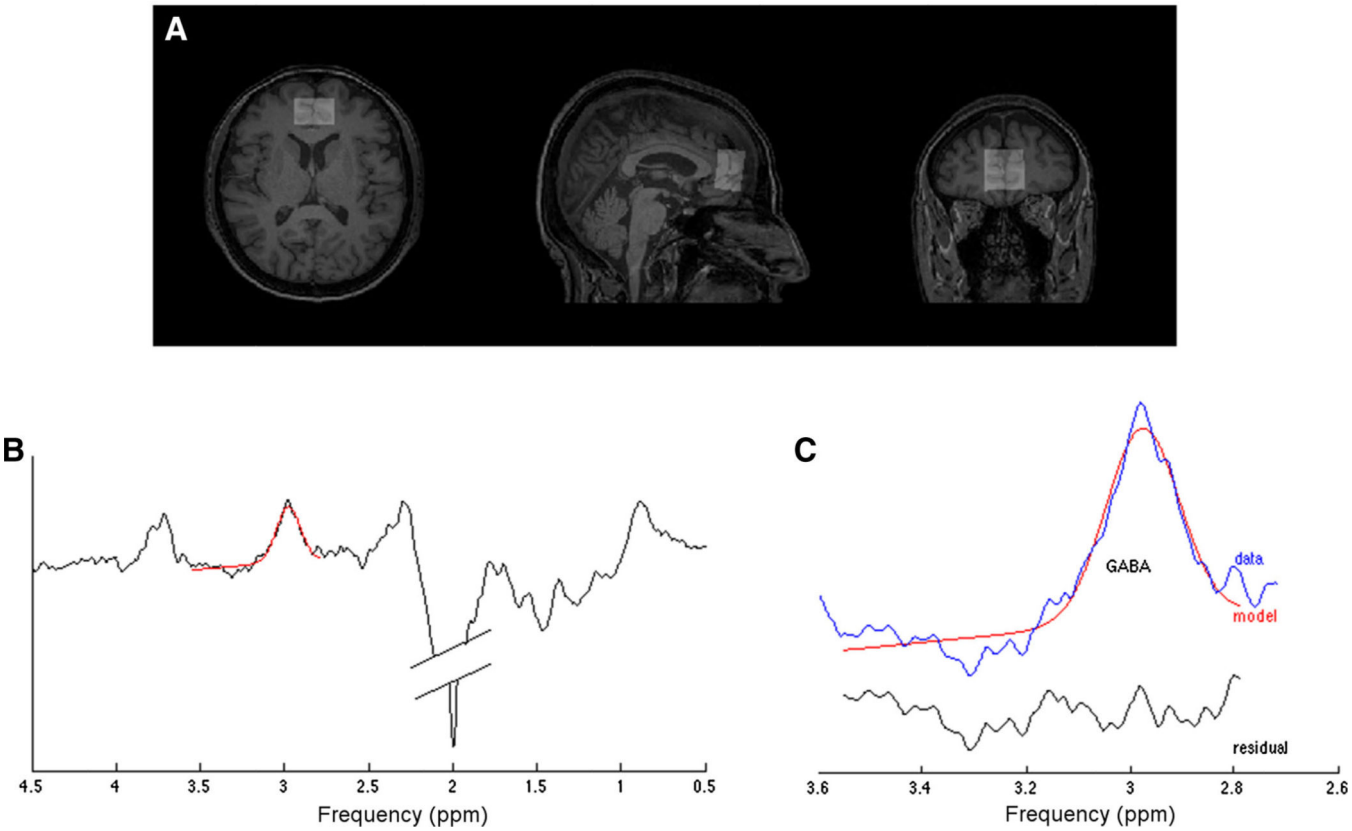

Fig. 1.

Proton magnetic resonance spectroscopy (^{1}H-MRS). **a** A voxel of 2.0 (anterior-posterior) × 3.0 (left-right) 9 3.0 (cranio-caudal) cm^3 was centered on the medial prefrontal cortex (mPFC) by using T_1-weighted image as anatomical reference; **b** representative GANNET-edited MR spectra showing the GABA peak (3.02 ppm, in *red*); **c** representative GANNET-edited spectra (in *blue*) with estimated GABA model and residual indicated in *red* and in *black*, respectively

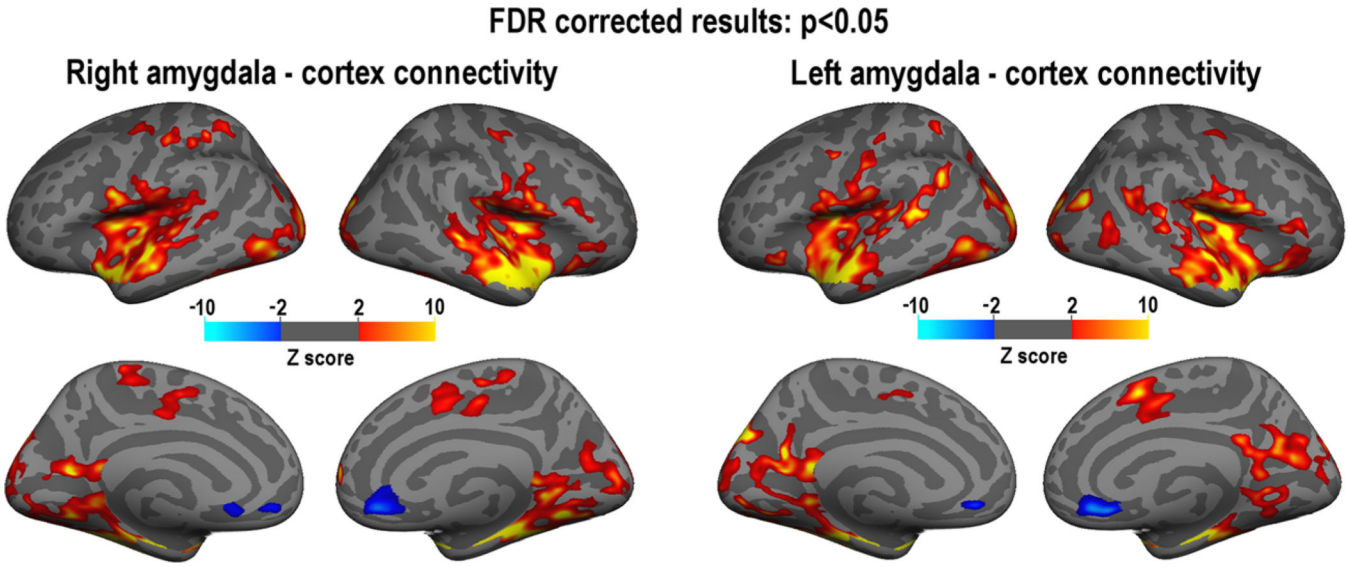

Fig. 2.

Maps show the functional coupling between the seed region (right and left amygdalae) and the cortex. The significant functional coupling ($p < 0.05$, FDR-corrected) is displayed by voxels rating from *red* to *yellow* for the positive correlations and from *dark blue* to *blue* for the negative correlations

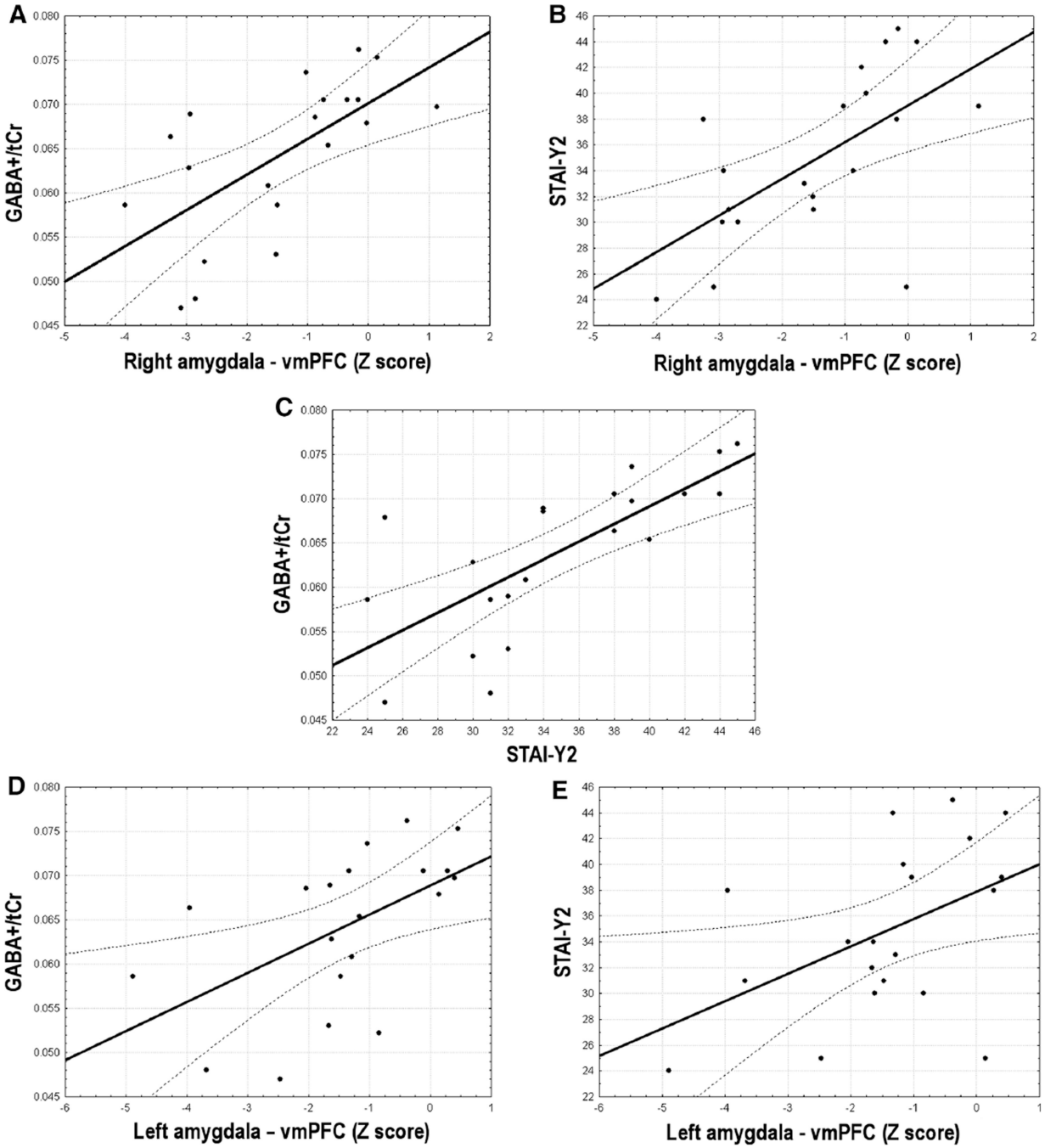

Fig. 3.

Scatterplots displaying the correlations among the GABA+/tCr within mPFC, amygdala–vmPFC functional connectivity and trait anxiety. The strength of the functional connectivity and trait anxiety were expressed by *Z* scores and STAI-Y2, respectively

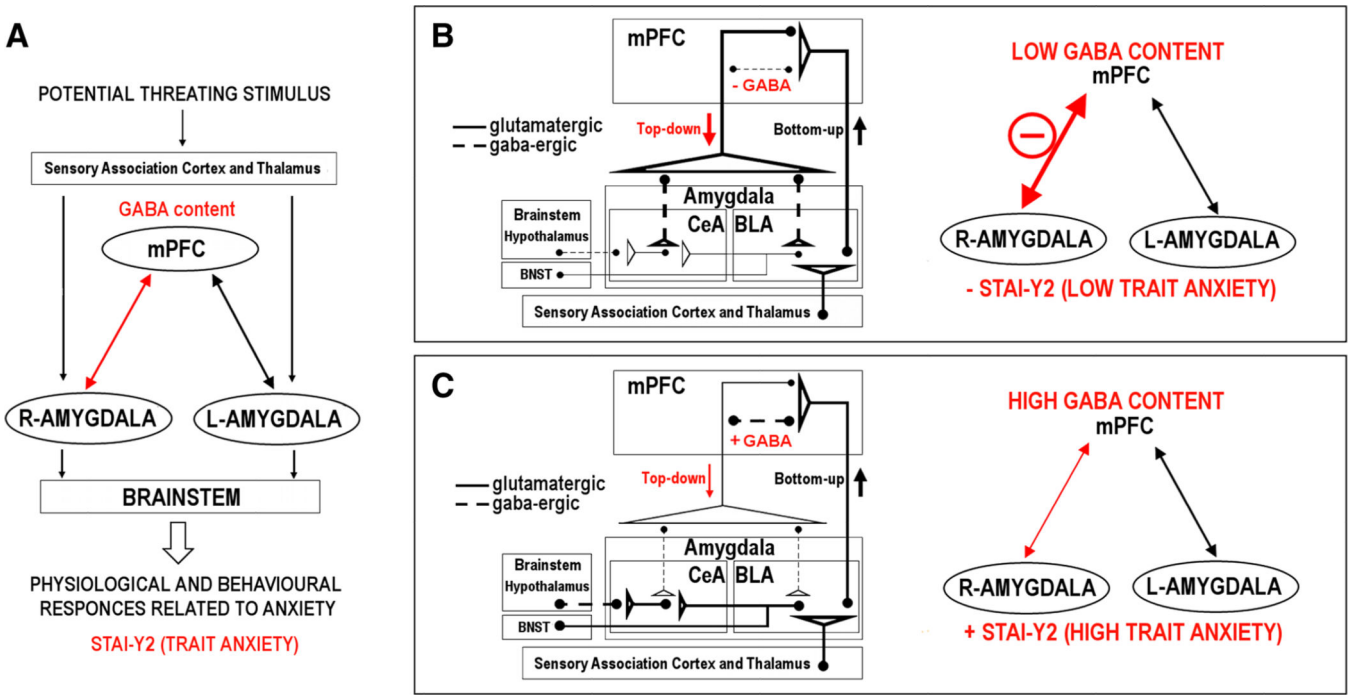

Fig. 4.

GABA-mediated circuit between the medial prefrontal cortex (mPFC) and the amygdala. **a** The amygdala receives incoming information on potentially threating stimulus from the thalamus and the sensory association cortex and it promotes a physiological and behavioral response by modulating the brainstem nuclei. In this context, the mPFC top–down regulation is key in order to regulate the amygdala activity. Particularly, the GABA content in the mPFC is associated to functional coupling between the amygdala and the mPFC and to trait anxiety. **b** The low GABA levels within the mPFC promote the correct functioning of the top–down modulation of the amygdala and of the GABA-mediated inhibition on the basolateral nuclei of the amygdala (BLA) and the centromedial nuclei of the amygdala (CeA). **c** The high GABA levels within the mPFC are linked to missing negative functional coupling within the mPFC– amygdala loop, which could be the consequence of a down-regulation of the top–down control of the amygdala. Thus, the resulting over-activation of the GABAergic neurons projecting from the CeA to the hypothalamus and brainstem and of the glutamatergic projections from the BLA to the bed nucleus of the stria terminalis (BNST) could lead to somatic manifestation of anxiety

Table 1

Mean ± standard deviation for demographic, psychometric, structural MRI and ^{1}H-MRS outcomes

Outcome	Mean ± SD
Age (years)	62.5 ± 10.7
Educational level (years)	10.8 ± 4.2
STAI-Y2	34.8 ± 6.4
GM (mm^3)	10,025 ± 1116
WM (mm^3)	8947 ± 961
GABA+/tCr	0.0640 ± 0.0086

GABA γ-aminobutyric acid, *GM* gray matter, *STAI-Y2* State-Trait Anxiety Inventory scale—subscale 2, *tCr* total creatine, *WM* white matter

Table 2

Functional connectivity between right amygdala and cortex

Cluster of interest	Max *Z* score[a]	Size (mm^2)	Number of voxels	Talairach coordinates		
				X	Y	Z
R-Lateral orbitofrontal gyrus	3.846	462.54	987	32.1	22.9	−13.2
R-Ventromedial prefrontal cortex	−3.914	331.67	654	10.8	34.5	−10.4
R-Pars-opercularis	3.288	246.48	434	44.2	24.4	17.3
R-Pars-triangularis	3.536	297.09	446	45.9	30.8	−7.4
R-Superior frontal gyrus	5.247	307.96	367	9.5	60.4	7.3
R-Paracentral gyrus	3.514	211.04	456	6.0	−15.8	50.6
R-Fusiform gyrus	7.374	3407.96	6266	35.7	−44.8	−14.2
R-Lateral occipital gyrus	5.136	1471.72	1892	24.9	−84.6	20.7
R-Pericalcarine gyrus	3.962	1145.16	1501	9.1	−80.6	12.6
R-Temporal pole	9.261	7426.15	16818	33.9	−0.2	−20.9
L-Ventromedial prefrontal cortex	−3.100	93.71	187	−11.9	39.5	−8.3
L-Rostral anterior cingulate gyrus	−2.878	103.95	224	−6.0	23.4	−7.4
L-Superior frontal gyrus	3.307	446.79	1149	−6.7	−4.2	47.4
L-Paracentral gyrus	3.395	318.40	779	−4.4	−34.8	59.3
L-Precentral gyrus	3.106	402.85	818	−34.6	−7.4	51.6
L-Postcentral gyrus	3.930	302.71	774	−47.9	−15.7	52.6
L-Inferior parietal gyrus	2.716	128.46	222	−36.7	−80.0	25.9
L-Superior parietal gyrus	4.144	532.14	1283	−34.7	−40.6	49.1
L-Precuneus	5.603	726.56	1688	−16.2	−57.2	13.2
L-Insula	6.460	7369.17	17282	−36.8	−0.9	−15.0
L-Fusiform gyrus	7.982	8482.78	12979	−36.7	−44.8	−15.7

[a]The maximal *Z* score in each cluster of interest was reported

Table 3

Functional connectivity between left amygdala and cortex

Cluster of interest	Max *Z* score[a]	Size (mm^2)	Number of voxels	Talairach coordinates		
				X	Y	Z
R-Ventromedial prefrontal cortex	−4.211	94225	567	10.1	31.2	−10.7
R-Superior frontal gyrus	5.119	12213	1530	8.8	9.9	46.2
R-Precentral gyrus	2.761	116192	369	39.4	−5.2	54.6
R-Pars-triangularis	3.818	41059	574	47.8	25.8	2.8
R-Inferior parietal gyrus	6.016	74473	702	43.2	−73.9	22.9
R-Lateral occipital gyrus	5.221	52118	4723	25.2	−84.1	20.0
R-Lingual gyrus	3.982	18813	1535	21.0	−56.4	2.8
R-Entorhinal cortex	7.702	143529	1481	24.3	−20.1	−18.4
R-Superior temporal gyrus	7.253	49436	15665	49.9	8.2	−18.7
L-Lateral orbitofrontal gyrus	4.005	282.34	575	−37.1	22.8	−14.3
L-Ventromedial prefrontal cortex	−3.379	78.04	170	−9.5	35.6	−8.5
L-Superior frontal gyrus	2.497	136.15	318	−9.6	4.1	45.9
L-Precentral gyrus	3.956	108.27	217	−51.2	0.2	40.0
L-Postcentral gyrus	2.905	105.98	294	−47.0	−16.8	54.1
L-Inferior parietal gyrus	5.667	982.06	2168	−50.7	−54.6	29.4
L-Superior parietal gyrus	6.850	3751.86	5035	−16.6	−82.5	37.0
L-Lingual gyrus	4.305	598.37	668	−5.7	−85.6	−3.5
L-Insula	9.585	6711.07	15388	−32.3	−3.4	−18.9
L-Entorhinal cortex	8.777	5303.31	9965	−22.3	−16.4	−21.7

[a]The maximal *Z* score in each cluster of interest was reported